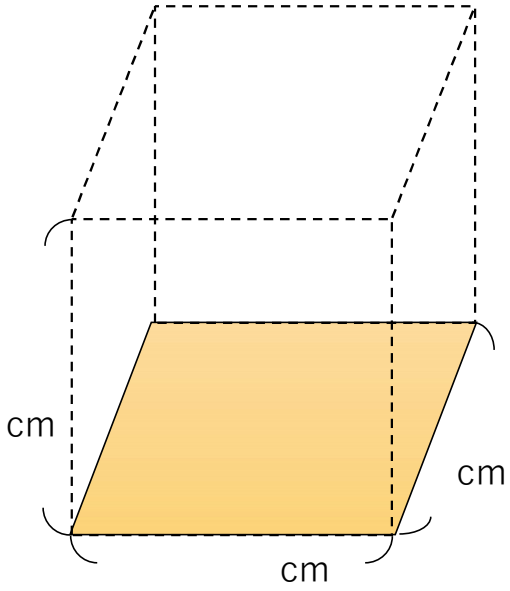
cm
cm
cm

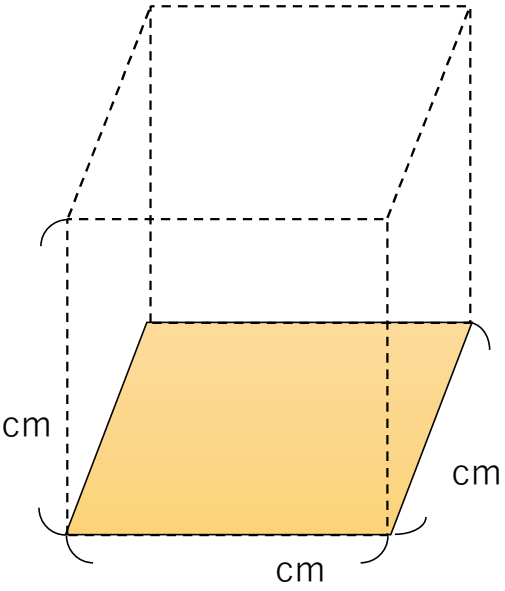
cm
cm
cm

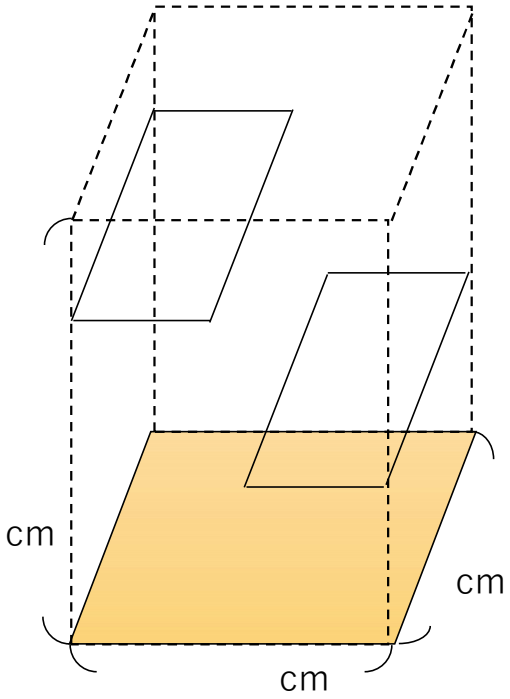
cm
cm
cm

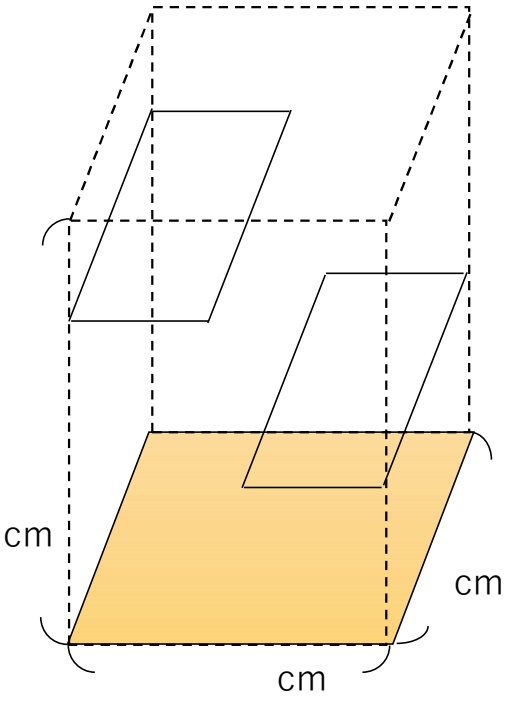
cm
cm
cm